PORTLAND BAY MARINA

GLENELG SHIRE
Victoria's Birthplace

N

KEY SECURITY GATES

2.5M LOWEST ASTRONOMICAL TIDE
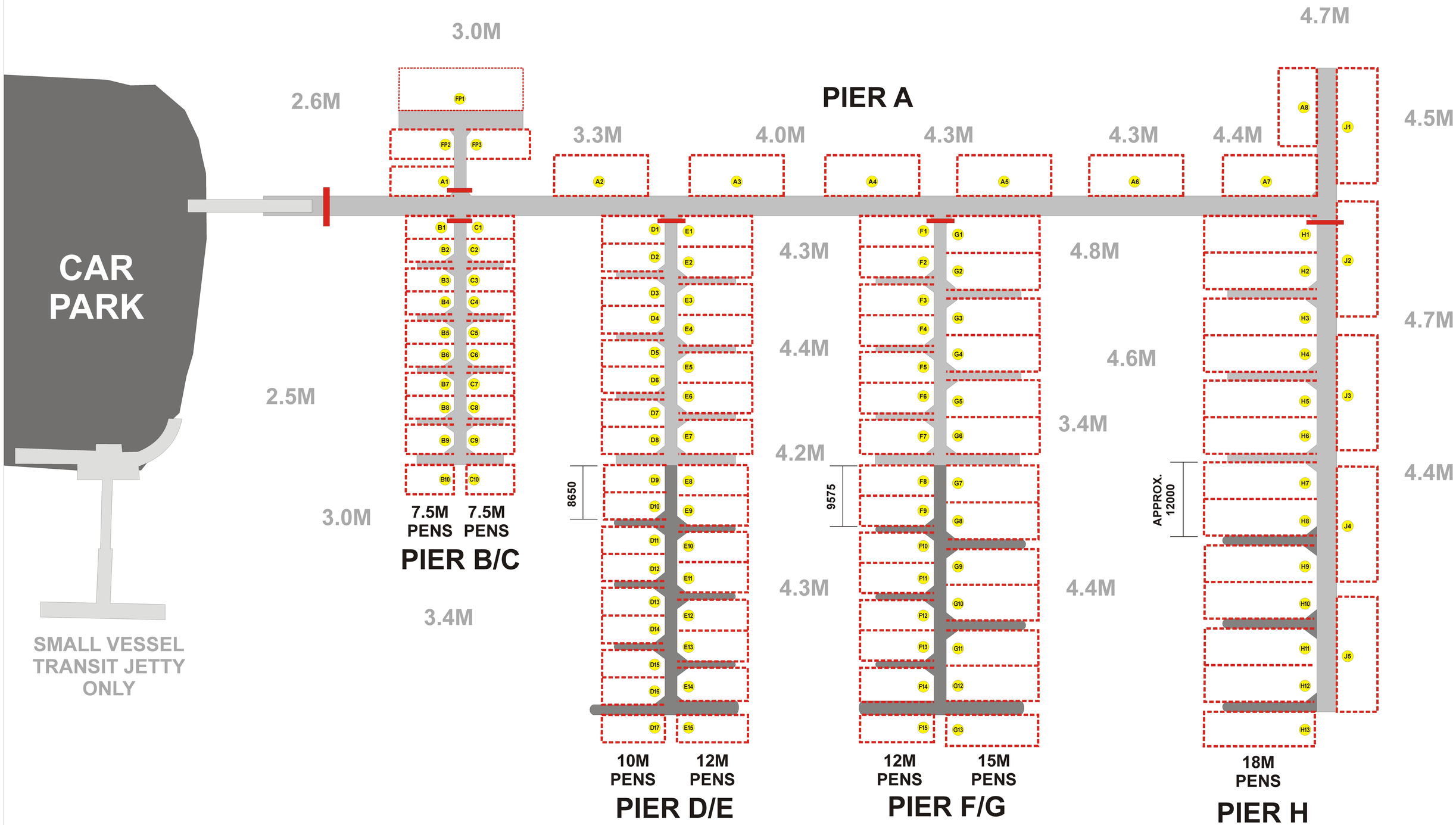
ARRIVAL BERTHS A7 & J1
HEAVY VESSEL FENDER PILES J4